REV.	DESCRIPTION	DATE
A	Release	12/1/12
B	Increase flange thickness	3/31/2017

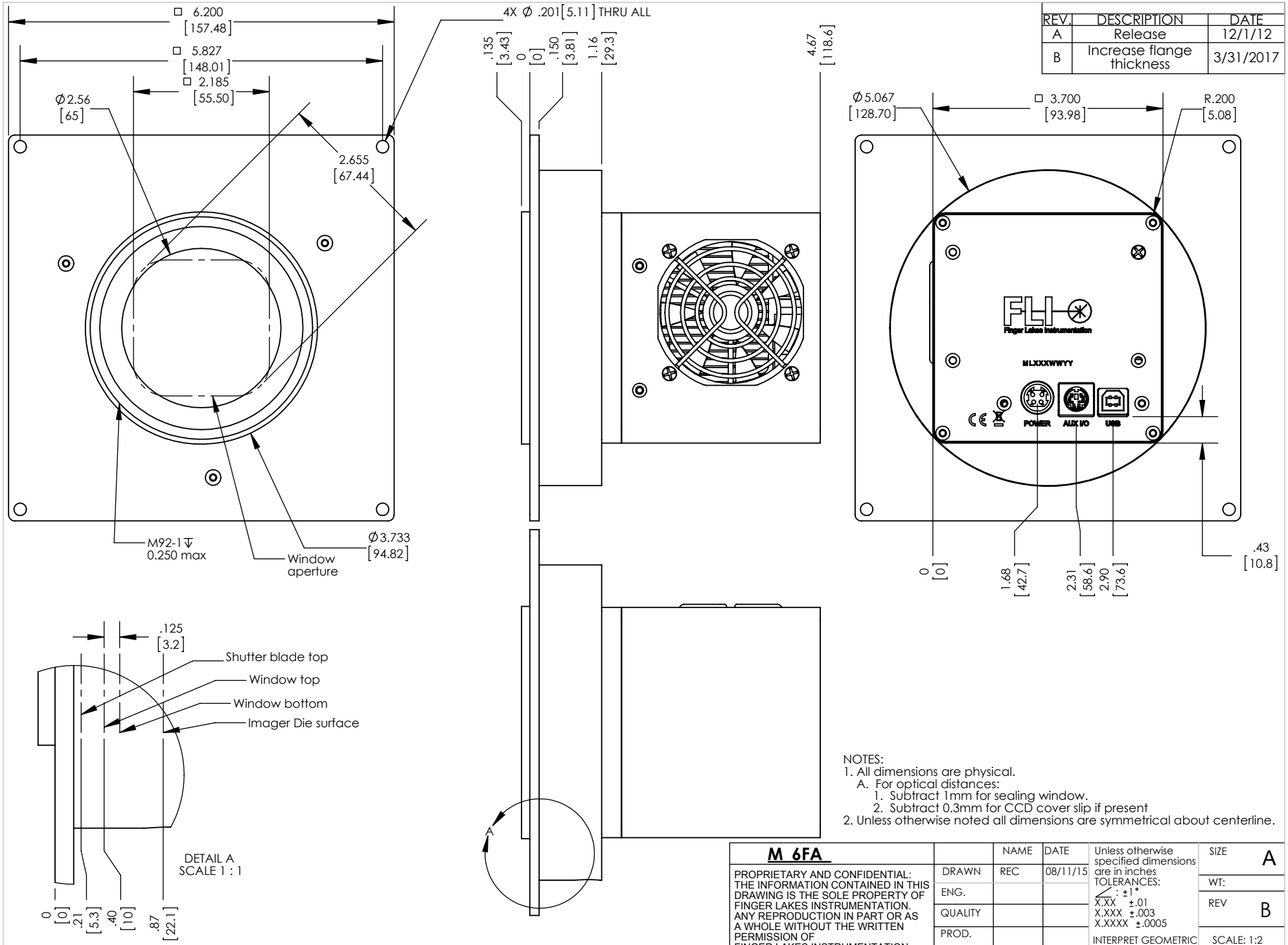

NOTES:
1. All dimensions are physical.
   A. For optical distances:
      1. Subtract 1mm for sealing window.
      2. Subtract 0.3mm for CCD cover slip if present
2. Unless otherwise noted all dimensions are symmetrical about centerline.

M 6FA

PROPRIETARY AND CONFIDENTIAL: THE INFORMATION CONTAINED IN THIS DRAWING IS THE SOLE PROPERTY OF FINGER LAKES INSTRUMENTATION. ANY REPRODUCTION IN PART OR AS A WHOLE WITHOUT THE WRITTEN PERMISSION OF FINGER LAKES INSTRUMENTATION IS PROHIBITED.

	NAME	DATE
DRAWN	REC	08/11/15
ENG.		
QUALITY		
PROD.		

DO NOT SCALE DRAWING

Unless otherwise specified dimensions are in inches
TOLERANCES:
∠ : ±1°
X.XX ±.01
X.XXX ±.003
X.XXXX ±.0005
INTERPRET GEOMETRIC TOLERANCING PER: ASME Y14.5

SIZE A
WT:
REV B
SCALE: 1:2
SHEET 1 OF 1

5 4 3 2 1